<table>
<tr><th></th><th>OMSTRAP 2013</th></tr>
<tr><td>SM 202 azz

OPTIONAL

Adjustable legs
Kit 5 mm.</td><td>Semiautomatic wrapping machine open frame model:
It works with strap 9/12/15 mm core 200 or 280 mm
Working table high 760 mm. fixed
Strap tensioning from 0,6 to 45 Kgstensionamento reggia da 0,6 a 45 Kgs. externally adjustable
Standard Voltage 220V monophase/50 Hz./0,5 Kw.
Machine dimensions 902 x 586 x 760 (L x P x H)
Standard color light blue
Series reset button
Electric operator controls 24 V
Machine weight 85 Kg.
Minimum package 80 X 30 (W x H)

from 760 to 930 mm
For working with strap 5x050 mm core 200 or 280 mm</td></tr>
<tr><td></td><td> 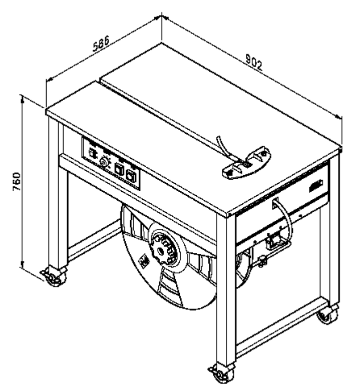
</td></tr>
<tr><td></td><td>
SM 202 azz</td></tr>
</table>