	OMSTRAP
SM 702 5	**High speed 5 mm** automatic strapping machine: **over 65 strapping a minute** strap 5 x 045 inside core 200 diam. external 480 mm. **Standard arch 550 x 400** Strap tensioning from 0 to 32 Kgs. Electronically adjustable Soft tensioning for delicate parcels Automatic disobstruction and loop ejection Start with fixed pedal or button control panel side **Automatic charge and change roll on the side of the machine** Working table height adjustable from 820 to 920 mm. Opens wide for quick inspection and maintenance Minimum package dimension 70 x 20 mm (W x H) Standard voltage 220V monophase/50 Hz./0,50 Kw. Machine dimensions 840 x 650 x 1305 (L x P x H) weight 150 Kg. Four wheels (two of them are locking) **Series fixed frontal bar pedal on each model**
OPTIONAL	
arches	According to the list
photocell	On working table
SQ6 SQ7	Intelligent disobstuction
Rear bar	Rear long Bar pedal
SM 702 9 mm.	Fo use with strap 9 x 050 core 200
SM 702 S	Stainless steel version
SM 702 P	Double parallel press version
SM 702 RS	Reduced group 5 or 9 arch 550x400 rectangles 50x10 rounds diam 34x2

archi WxH

550x400
650x500
850x400
850x500
850x600
850x800
1050x800
1050x1000
1250x500
1250x800
1250x1000
1650x500

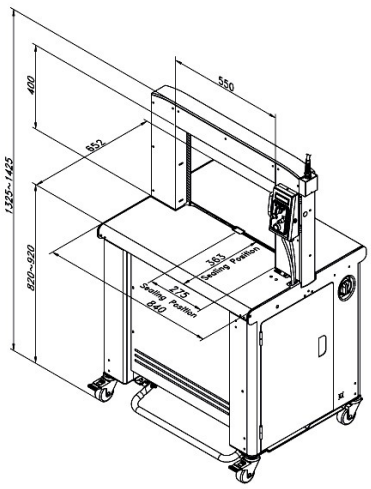

SM 702 59 550x400 **SM 702 59 550x400**